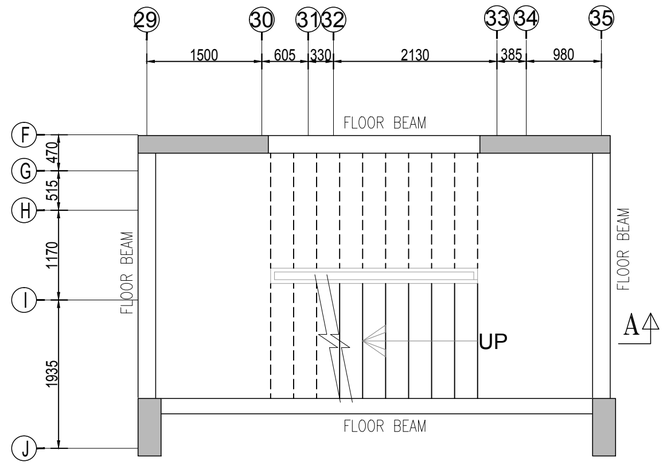

GROUND FLOOR LEVEL PLAN

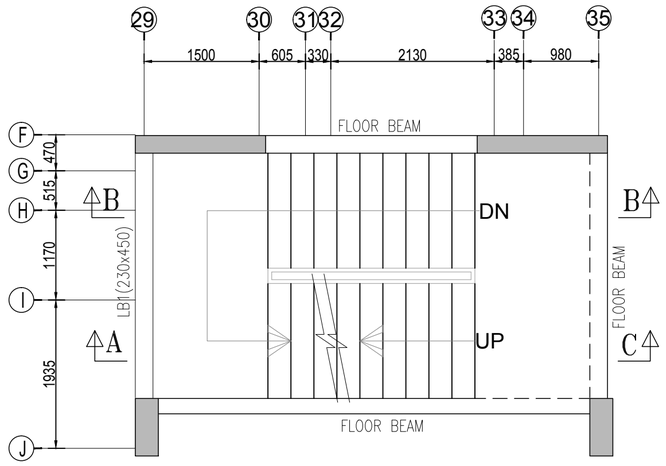

1ST TO 14TH FLOOR LEVEL PLAN

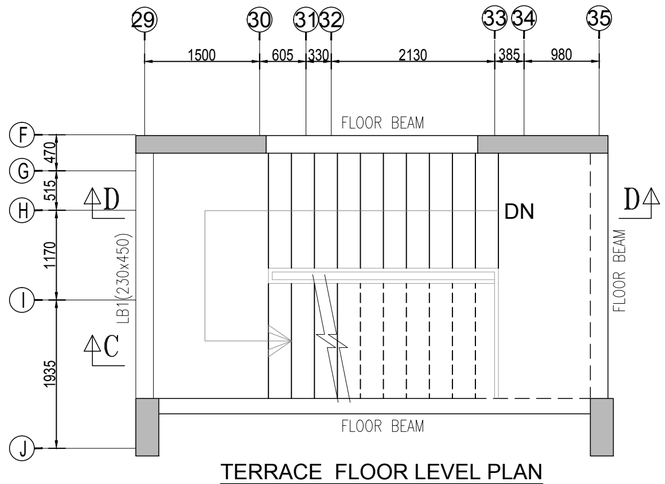

TERRACE FLOOR LEVEL PLAN

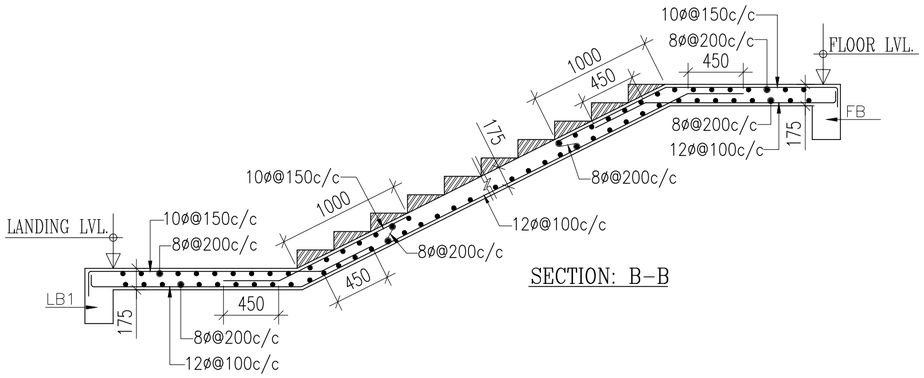

SECTION: B-B

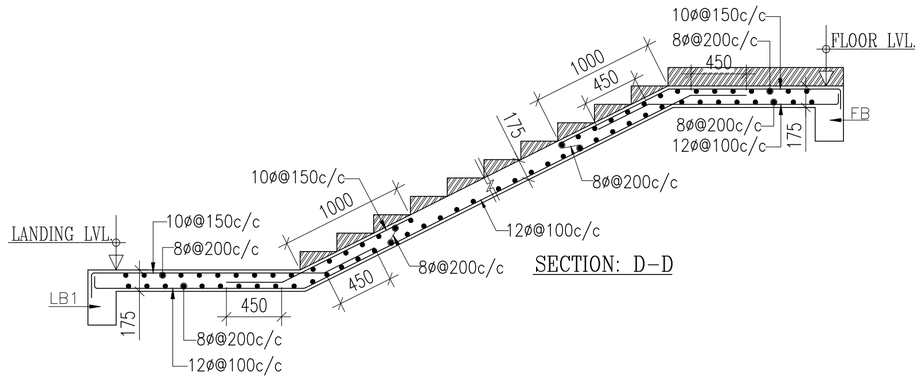

SECTION: D-D

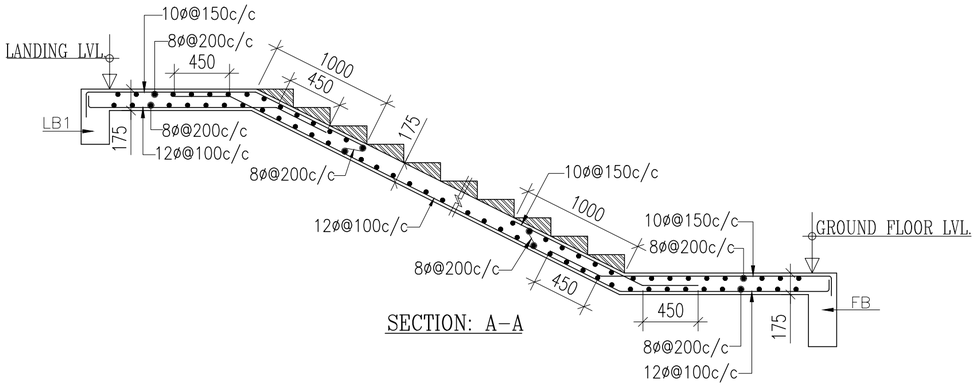

SECTION: A-A

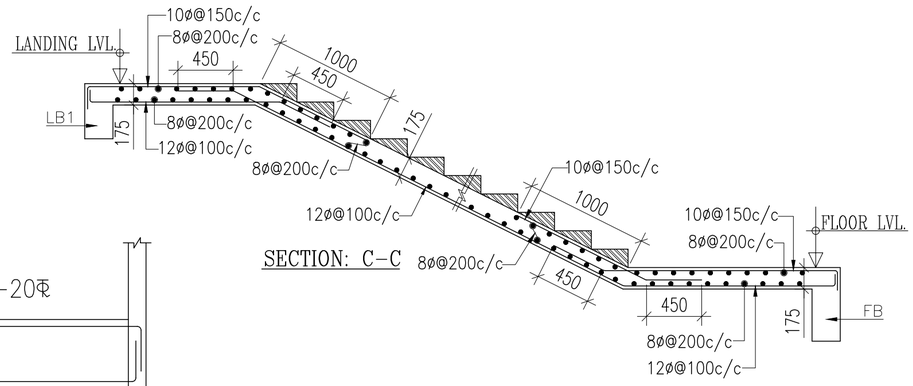

SECTION: C-C

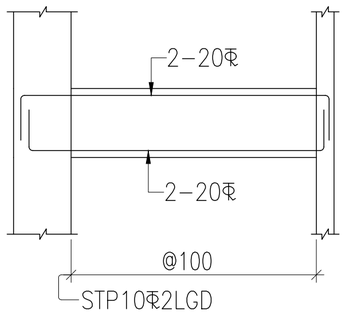

LB1(230X450)

NOTES:

1. READ THIS DRAWING IN CONJUNCTION WITH RELEVANT ARCHITECTURAL DRAWINGS. ANY DISCREPANCY IF FOUND SHALL BE BROUGHT TO THE NOTICE OF CONSULTANT.
2. ALL DIMENSIONS & LEVELS ARE IN MILIMETERS.
3. DO NOT SCALE ANY DIMENSION.
4. CONFIRM LOCATION OF WALLS WITH RELEVANT ARCH. DRGS.
5. GRADE OF CONCRETE
   RAFT : M-25 COLUMNS/SHEAR WALLS : AS/SCHDULE.
   STAIRCASE : M-25
6. HYSD REINFORCEMENT BARS CONFIRM TO IS:1786:1979 FE 500D.
7. THE CLEAR COVER TO THE REINFORCEMENT SHALL BE AS FOLLOWS:-
   (a) RAFT TOP & SIDE: 50 MM
   RAFT BOTTOM : 75 MM
   (b) COLUMNS : 40 MM
   (c) BEAMS SIMPLE/CONTINUOUS : 40/30 MM
   (d) SLABS SIMPLE/CONTINUOUS : 25/25 MM
   (e) CHAJJAS/CONOPY : 20 MM
   (f) R.C.C. WALL FOR >230 : 40 MM
   (g) R.C.C. WALL FOR <=230 : 25 MM
   NOMINAL COVER IS THE DEPTH OF CONCRETE COVER TO ALL STEEL REINFORCEMENT INCLUDING LINKS/ TIES/ STIRRUPS.
8. NOT MORE THAN 50% OF THE BARS SHALL BE LAPPED AT ANY SECTION. LAPS CLOSE TO THE MID SPAN IN BOTTOM BARS & CLOSE TO SUPPORTS IN TOP BARS SHALL BE AVOIDED.
9. ALL R.C.C. TO BE MACHINE MIXED, VIBRATED AND CURED THOROUGHLY AS PER I.S 456-LATEST.
10. ALL FOOTING ARE CENTRALLY PLACED WITH RESPECTED TO THE CENTER LINE OF COLUMN.
11. REINFORCEMENT SHALL BE PROVIDED IN TWO LAYERS WHEREVER FOUND NECESSARY WITH SPACER BAR TO BE PROVIDED BETWEEN TWO LAYERS OF REINFORCEMENTS AS PER IS:456. SPACER BARS
12. ALL DIMENSIONS MUST BE CHECKED WITH ARCHITECT'S DRGS. & IN CASE OF ANY DISCREPANCY ARCHITECTS DRGS. SHALL PREVAIL.
13. ALL CONSTRUCTION JOINTS SHALL BE APROVED BY CONSULTANT ON THE BASIS OF SCHEME PREPARED BY CONTRACTOR.
14. TOP AND BOTTOM EXTRA BARS IN BEAMS TO EXTEND BEYOND THE FACE OF SUPPORT AS SHOWN IN DRG UNLESS OTHERWISE SHOWN.
15. THE FIRST STIRRUPS IN BEAMS SHALL BE AT A DISTANCE OF 50MM FROM THE JOINT FACE THE SPECIAL CONFINING REINFORCEMENT SHALL BE PROVIDED THROUGH THE JOINT AT THE GIVEN SPACING IN COLUMNS.
16. All ANGLES ARE RIGHT ANGLES UNLESS OTHERWISE SPECIFIED.
17. ---------- INDICATES BOTTOM BARS
    ———————— INDICATES TOP BARS

GOOD FOR CONSTRUCTION
CHORDIA ENGINEERING CONSULTANCY SERVICES

OMAXE STRUCTURE DEPT.		
ADVANCE COPY	TENDER COPY	GOOD FOR CONSTRUCTION ✓
SIGN.		

REV.	DATE	DESCRIPTION
R0	29-11-2024	GOOD FOR CONSTRUCTION

STR.CONSULTANT :

Chordia Engineering Consultancy Services
I-1738, LOWER GROUND FLOOR, CHITTRANJAN PARK, NEW DELHI-110019.
PH : (011) - 41644915, 41644916,

CLIENT NAME :-

M/S OMAXE PANCHAM REALCON PVT. LTD.
56 A/56B FIRST FLOOR, ADARSH SQUARE , SARDAR PATEL MARG, CIVIL LINES , PRAYAGRAJ - 21101

PROJECT NAME :

PART COMPLETION TOWER -E
AT GH-11, NAINI,SECTOR-7,AT
HI-TECH CITY, PRAYAGRAJ

DRAWING TITLE :

STAIRCASE DETAIL ST- 03

TOWER- E(S+14)

DRAWING NUMBER :

OMX-HT-S-503

DRAWN BY : BUNTY	SCALE : NTS	REVISION R0
CHECKED BY : SAMIM	DATE : 29-11-2024	NORTH :
APPROVED BY : S.JAIN		